Question 1: For a series resonant circuit shown in fig. 1 with Resistor R, Inductor L and Capacitor C, determine the expression for frequency, f_L at which the voltage across the inductor goes to maximum. Also, express the expression interms of the quality factor Q.

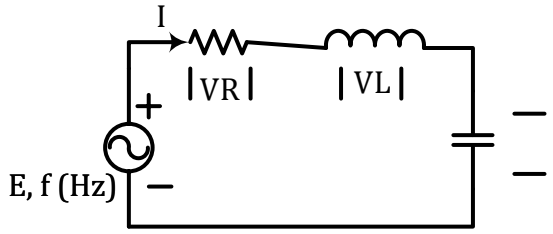

FIG 1

f_L $(in\ terms\ of\ R, L\ and\ C\ )$
$=$

[8]

f_L $(in\ terms\ of\ Q\ ) =$

[2]

Question 2: Find the voltage, v_0 in the circuit below in Fig 2. Let $V_1 = 10V$, $V_2 = 13V$, $R_1 = R_3 = 2k\Omega$, $R_2 = 4k\Omega$, $R_4 = 6k\Omega$.

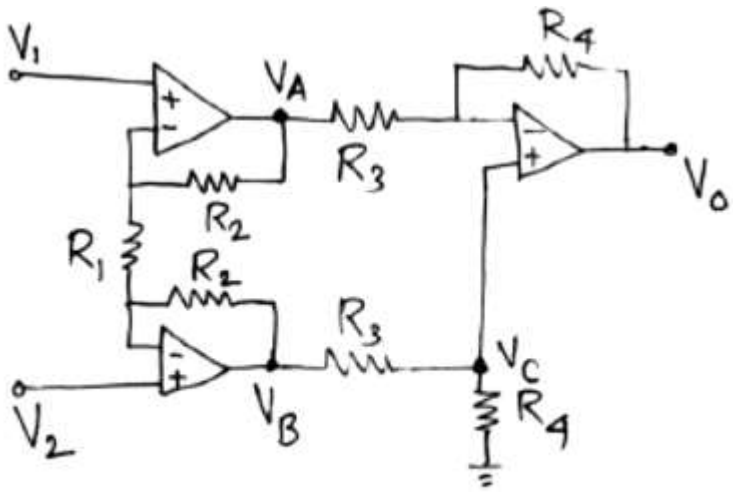

Fig. 2

Fill up the answers in the space below:

$V_A =$		**[2.5]**
$V_B =$		**[2.5]**
$V_C =$		**[2.5]**
$V_0 =$		**[2.5]**

Question 3:

(a) Sketch the output waveform for the circuit below in fig 3a: Sketch the waveform only in the space given below in fig 3b

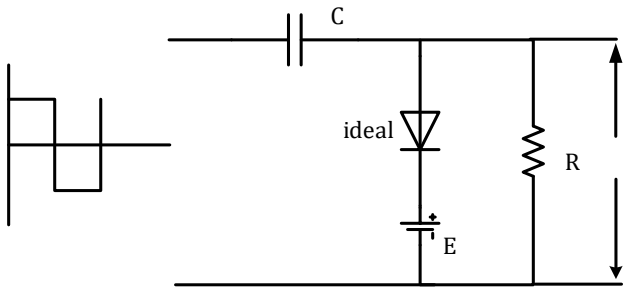

Fig. 3a

During Positive cycle: (Draw the modified electrical equivalent circuit below) **[5]**

$V_C =$

$V_0 =$

During Negative Cycle: (Draw the modified electrical equivalent circuit below) **[5]**

$V_0 =$

Draw the input-output waveform in the space provided below:

Mention the Peak value

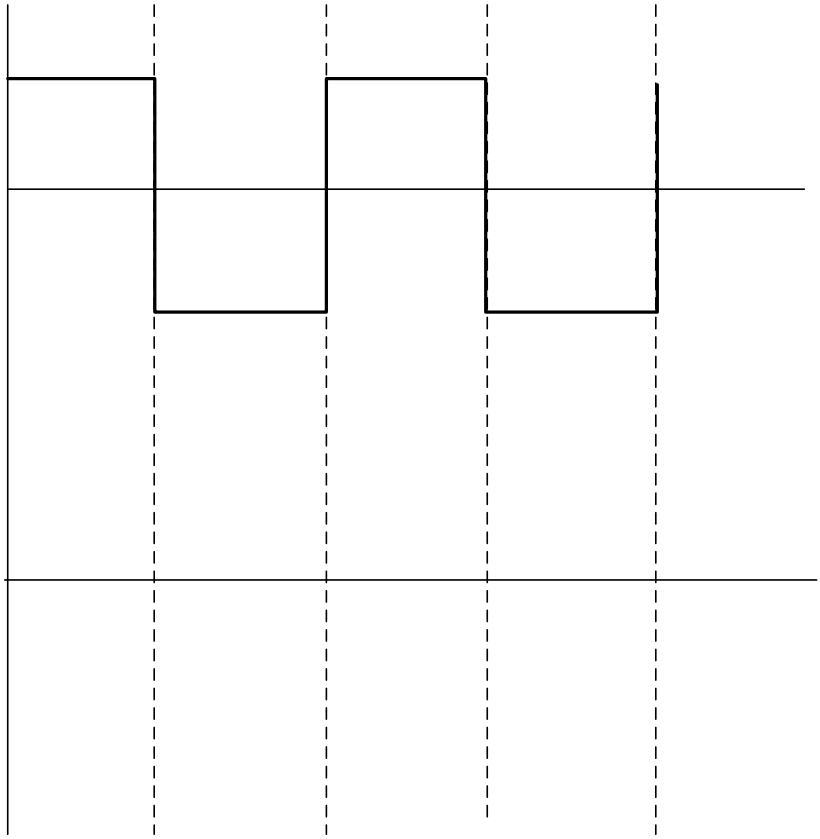

Fig . 3b

(b) Determine the output voltage, v_0 waveform for the circuit below in Fig. 4a. The diode is assumed to be made of Silicon.

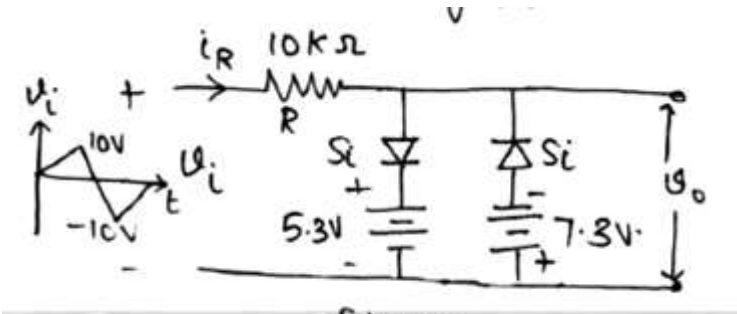

Fig 5a

Draw the input-output waveform in the space provided below in fig 4b: **[10]**

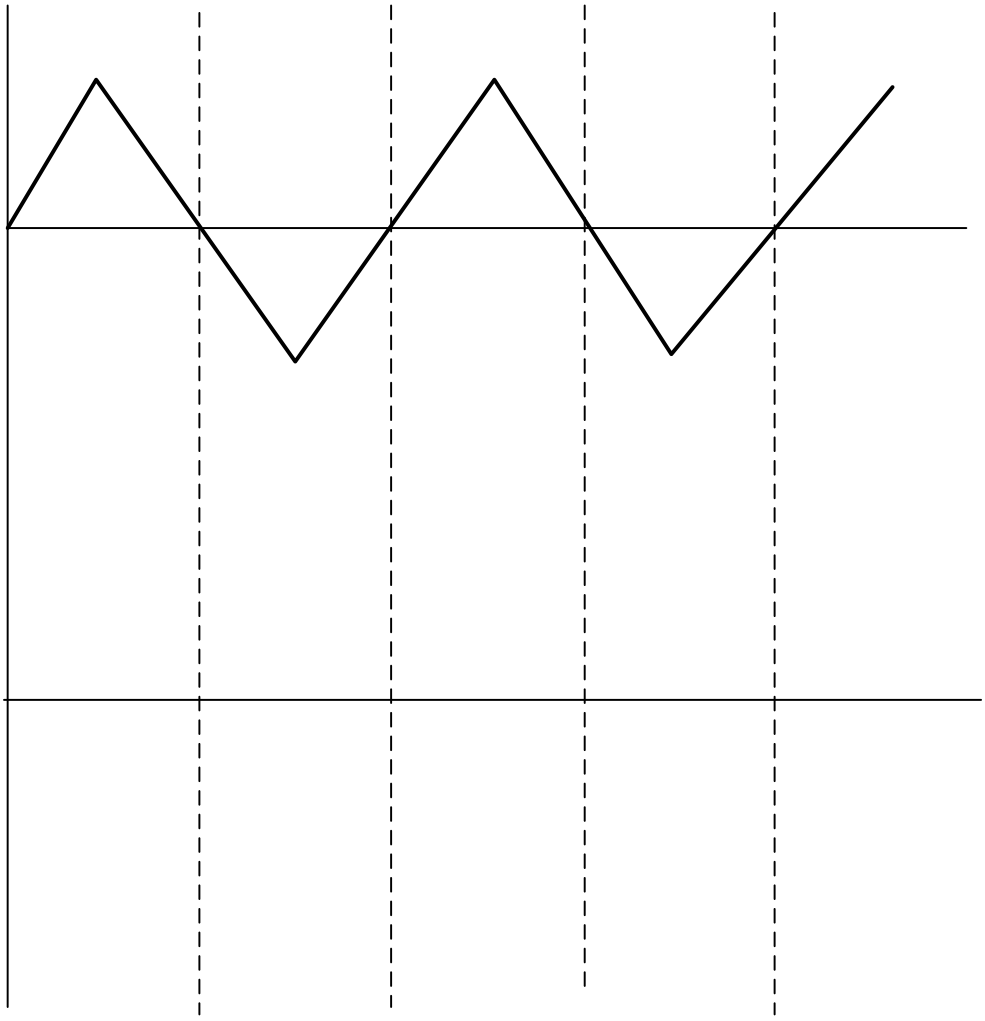

Mention the Peak value

Fig . 4b

Question 4: For the system of Fig. 5 below:

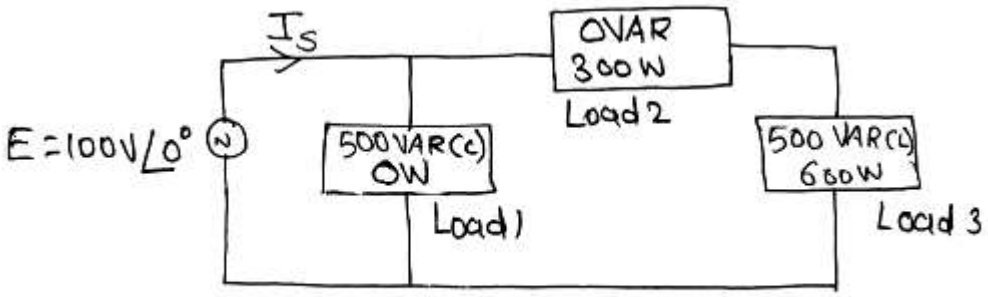

Fig 6

a. Find the total number of watts, volt-amperes reactive, volt-amperes, and power factor, F_p. Calculate and fill up the answers in the space provided. **[4]**

total number of watts =	
total number of volt − amperes reactive =	
total number of volt − amperes =	

$F_p =$ [ ]

b. Find the current I_s from the source E. **[2]**

$I_s =$ [ ]

c. Find the type of elements and their impedance in ohms within each electrical box. (Assume that all elements of a load are in series.) **[4]**

$Z_1 =$	
$Z_2 =$	
$Z_3 =$	

Question 5: Using the Δ -Y or Y- Δ conversion, determine the current I for the network of Fig. 6

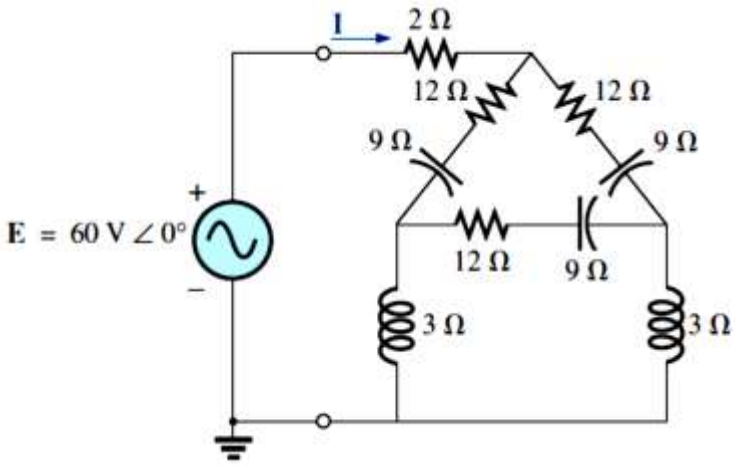

Fig . 6

$Z_T(Phasor\ Form) =$

$I(Phasor\ Form) =$